URBAN FORESTRY
PACKAGE

DUR-A-LIFT®

SHOWN: DTAX2-45 AERIAL WITH 9'9" CHIPPER BOX

WWW.DUR-A-LIFT.COM

SPECIFICATIONS

	DPM2 SERIES	DTAX2 SERIES	
	DPM2-53	DTAX2-45	DTAX2-40
WORKING HEIGHT	60'*	50'	45'
SIDE REACH	31'6"	30'	28'
APPROX. STOWED TRAVEL HEIGHT	12'4"	11'3"	11'2"
HEIGHT TO BOTTOM OF PLATFORM	54'	45'	40'
BASKET CAPACITY	600#	350#	400#
APPROX. LIFT WEIGHT	4400#	2585#	2450#
ARTICULATING ARM TRAVEL	0° to 75°	-5° to 81°	-5° to 81°
MAIN BOOM TRAVEL	-30° to 75°	-25° to 75°	-25° to 75°
EXTENSION TRAVEL	120"	122.5"	110.5"

Dur-A-Lift Inc. reserves the right to improve models and change specifications without notice or obligation. Dur-A-Lift equipment meets or exceeds all applicable ANSI Standards as of the date of manufacture.

*Maximum height achievable with addition of the optional 22" basket elevator.

DPM2 SERIES

- ADDED REACH & LOAD CAPACITY
- WORKING HEIGHT UP TO 60'; SIDE REACH TO 31'6"
- 11'9" ALUMINUM CHIPPER BOX

DTAX2 SERIES

- COMPACT UNIT WITH A BIG REACH
- UNDER CDL OPTIONS
- WORKING HEIGHT UP TO 50'; SIDE REACH TO 30'
- 7'6" & 9'9" ALUMINUM CHIPPER BOX OPTIONS

DUR-A-LIFT®

WE SPEAK BUCKET TRUCK

DPM2

Models: DPM2-53

STANDARD

Proportional controls; lower override controls; engine start/stop from basket; basket access from ground; compensated upper boom; insulated models available in category C or D; hydraulic basket leveling; continuous rotation; joystick and lockout controls; 180° basket rotator; 24"x 30" fiberglass basket, 600# capacity

OPTIONAL

High electrical resistant controls; outriggers; basket liner for fiberglass baskets; fiberglass main and articulating booms; tool circuits; D.C. backup system; 22" basket elevator; non-insulated versions available (DPM2S); 110 v outlet at basket (non-insulated only)

CHIPPER BODY FEATURES

Single swing rear gate with robust latch; pruning compartment; superior top ventilation; cross box for pole saws; marine grade aluminum; separate compartment for ropes; shovel & ladder compartment; Oval flashers front and rear; option for additional compartments under chipper body (shown above)

INSULATED OR NON-INSULATED

The Urban Forestry Package is available in insulated (Cat. C or D) or non-insulated formats. Full pressure controls.

Insulated: DPM2-53, DTAX2-45, DTAX2-40
Non-insulated: DPM2S-53, DTAX2S-45, DTAX2S-40

REACH DIAGRAM

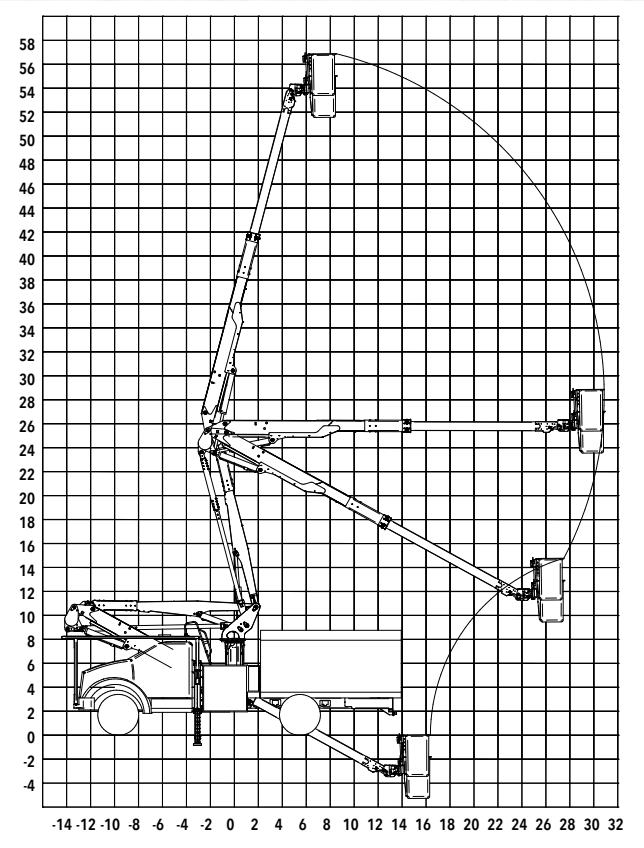

Reach up to 60′ with optional basket elevator

DPM2-53 AERIAL; 33,000 GVWR CHASSIS; 11′9″ BODY

DTAX2

Models: DTAX2-45, DTAX2-40

STANDARD

CONTROLS: Proportional controls; lower controls with override located at the turntable; engine start/stop from the basket; individual control levers

HYDRAULIC SYSTEM: Rated pressure is 2200 PSI; operating pressure is 2000 PSI; open center hydraulic system; 180° rotating basket

MECHANICAL SYSTEM: Telescoping and articulating boom action; offset main boom reduces travel height; shear ball rotation driven; fully enclosed worm gear box; non-continuous rotation; insulated extension boom 46 kV (DTAX2); 24" x 24" basket, 350# capacity; 110V outlet at upper controls (DTAX2S).

OPTIONAL

Single hand joystick upper control; outrigger or torsion bars; 12 volt DC backup; fixed basket position (side or end); basket offered in various sizes and configurations; basket liner 50 kV (DTAX2); main boom fiberglass insert (DTAX2); chassis isolator art boom fiberglass insert (DTAX2); continuous rotation; tool trays of various sizes; basket and control cover; upper and lower hydraulic tool circuits; lower stow/dump control; special paint color.

DTAX2-45 AERIAL; 22,000 GVWR CHASSIS; 9'9" BODY

REACH DIAGRAM

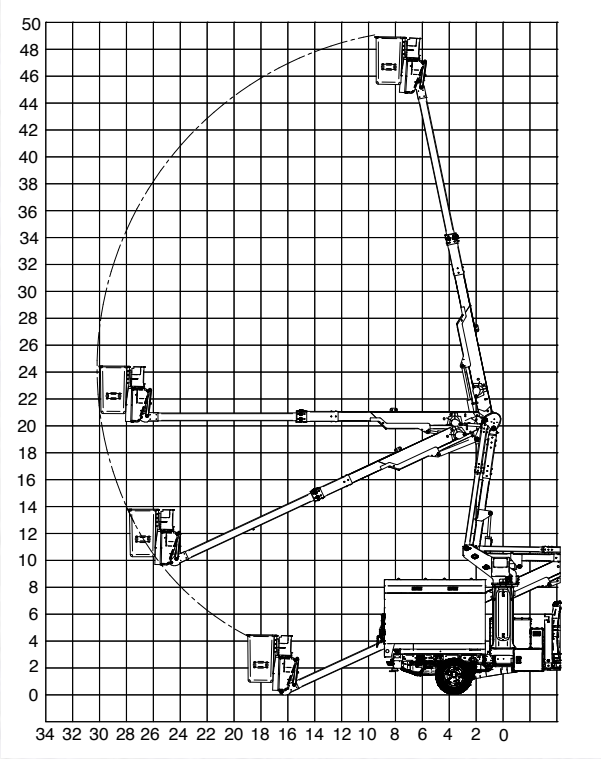

END HUNG BASKET CONFIGUATION SHOWN.
SUBTRACT 2 FT FOR ACCURATE SIDE REACH
VALUE FOR SIDE HUNG BASKET.

URBAN FORESTRY PACKAGE

DUR-A-LIFT®
WE SPEAK BUCKET TRUCK

URBAN FORESTRY PACKAGES

Ask about available aerial, chassis, and chipper body options. Let us build an Urban Forestry truck that's the perfect size for your needs.

	DPM2-53	DTAX2-45		DTAX2-40	
WORKING HEIGHT	60'*	50'	50'	45'	45'
CHASSIS, CLASS REQ.	Class 6	Class 6	Class 5+	Class 6	Class 5+
CHIPPER BODY LENGTH	11'9"	9'9"	7'6"	9'9"	7'6"

*With optional basket elevator

CHIPPER BODY DIMENSIONS: 11'9" (L) X 96" (W) 54" (H)

CHIPPER BODY DIMENSIONS: 9'9" (L) X 96" (W) 54" (H)

CHIPPER BODY DIMENSIONS: 7'6" (L) X 96" (W) 54" (H)

EASY UNLOAD

The Urban Forestry bucket trucks feature a scissor hoist for quick and easy unloading.

READ MORE

DUR-A-LIFT, INC., 2002 KINGBIRD AVENUE, PO BOX 31, GEORGE, IOWA 51237
WWW.DUR-A-LIFT.COM | 1-877-4DURALIFT | SALES@DUR-A-LIFT.COM